(No Model.)

M. L. BAXTER.

TRANSMITTING TELEPHONE.

No. 277,198. Patented May 8, 1883.

Fig. 2.

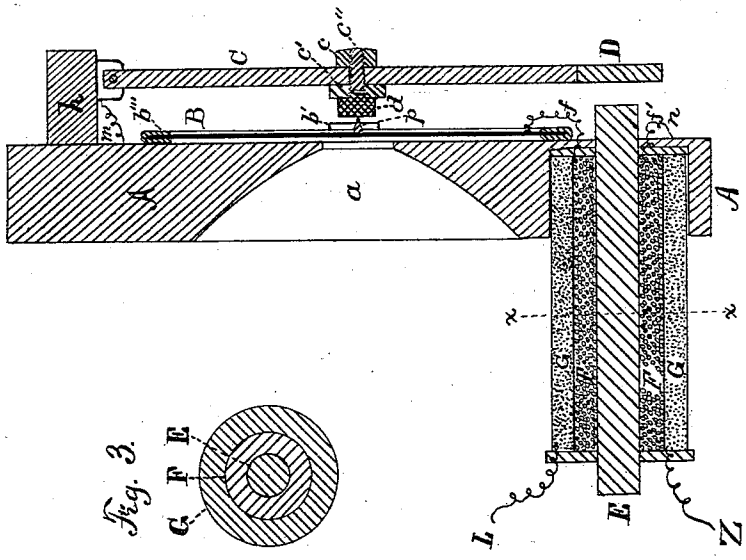

Fig. 3.

Fig. 1.

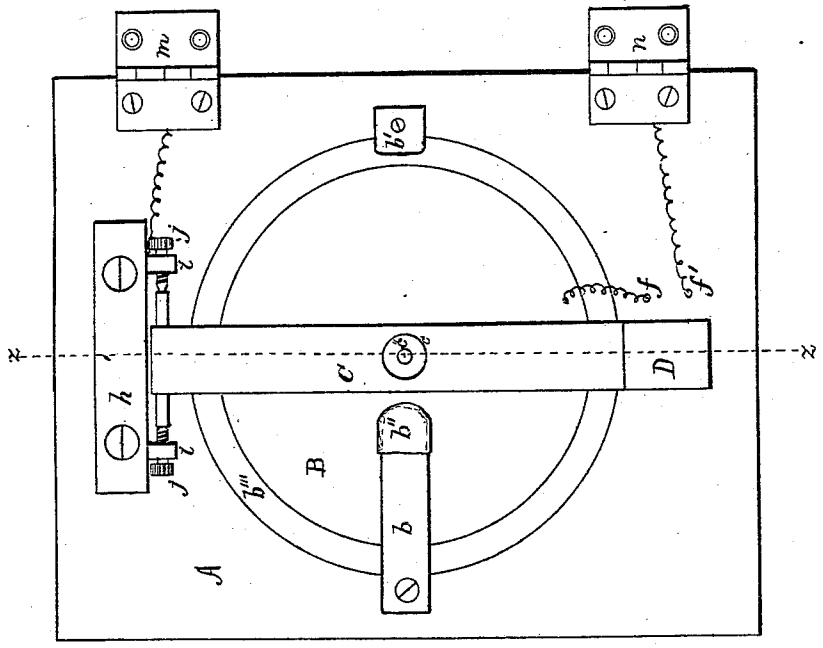

Witnesses:
James T. Richardson
O. J. Dixon

Inventor:
Myron L. Baxter

N. PETERS. Photo-Lithographer. Washington, D. C.

UNITED STATES PATENT OFFICE.

MYRON L. BAXTER, OF AURORA, ILLINOIS, ASSIGNOR, BY MESNE ASSIGNMENTS, TO THE OVERLAND TELEPHONE COMPANY.

TRANSMITTING-TELEPHONE.

SPECIFICATION forming part of Letters Patent No. 277,198, dated May 8, 1883.

Application filed December 9, 1882. (No model.)

To all whom it may concern:

Be it known that I, MYRON L. BAXTER, a citizen of the United States of America, residing at Aurora, in the county of Kane and State of Illinois, have invented certain new and useful Improvements in Transmitting-Telephones, of which the following is a specification, reference being had therein to the accompanying drawings.

The object of my invention is to provide means whereby the limit of variation in the strength of a voltaic current may be greater than at present. This refers to the undulatory current used for generating a current for the transmission of speech telephonically, and which, as is well known, is the result of a variation gradual in its nature from strong to weak, and vice versa. When the current sent to line is due to magnetic induction from a permanent magnet the variation to which it owes its existence is effected by strengthening or weakening said magnet; but when said current is derived from a galvanic battery by induction the variation is produced in the primary or direct battery-current. To the latter class my invention pertains.

In common with other transmitters I use in mine the vibrating diaphragm carrying or actuating a metallic stud in unstable contact with a piece of hard or soft carbon or carbonaceous material, which is attached to a freely-suspended bar, and an induction-coil for producing the intense induced secondary current; and these, either singly or in combination in their well-known forms, I do not claim.

In all the battery-transmitters with which I am acquainted the limit of variation is very narrow, and consequently the strength of the induced current is small.

My object is, as hereinbefore set forth, to increase the variation, (without actually breaking the circuit,) and consequently to send to line a much more powerful induced or secondary current to work upon the distant receiving-telephone, overcoming resistance, leaks, and extraneous induction incident to long lines. To effect this I make use of the devices shown in the accompanying drawings, in which—

Figure 1 is a plan view of the inside of the door of the transmitter. Fig. 2 is a vertical section of the door through the line $z\,z$, Fig. 1. Fig. 3 is a vertical section of the induction-coil through line $x\,x$, Fig. 2.

A is the door of the transmitter; a, the orifice through which the sounds to be transmitted obtain access to the diaphragm B, which is surrounded at its periphery by the soft-rubber binding b''', and is held in position by the clip b' and the presser-spring b, with its soft-rubber-covered end b''. From the block h is suspended, from the pointed screws $j\,j$, (passing through threaded lugs $i\,i$,) the swinging bar C, carrying the carbon button d, nuts c and c', and the bolt c''. From the center of the diaphragm projects the metallic stud p in unstable contact by gravity with the carbon button d. The suspended bar C may be of soft iron throughout its entire length, or of other magnetic material, or, as is shown, it may be terminated only with the soft iron or other magnetic material D.

E, F, and G represent the induction-coil, which, in addition to its ordinary function, serves, as hereinafter fully described, to vary the pressure between the metal stud p and the carbon button d. One pole of the battery (which is not shown) is connected to the butt or hinge m and the other to the hinge n, the course of the current being from n to f', thence through the convolutions of the primary coil F, thence to f, thence through the metal diaphragm B to the metallic stud p, (or, if a non-conducting diaphragm be used, by a wire connecting f with p,) and thence to the battery through the carbon button d, the suspended bar B, the pointed screw j, the lug i, and the hinge m.

The secondary coil G is wound upon the primary coil F for economic reasons. It may be disregarded if a complete induction-coil, properly connected with the line, be introduced into the primary circuit between either of the hinges and the battery. With the secondary coil G removed, we have simply a straight electro-magnet, E F, included in the circuit and controlling the pressure between the electrodes $p\,d$.

In order to so adjust the carbon button d

with relation to the bar C that when the electro-magnetic controller E F is not exerting any attraction the contact between the electrodes shall be by gravity very slight and just sufficient to establish the current through the helix F, the bolt c'' is screwed in or out of the bar C, carrying with it the nut c' and the attached carbon button d, and the nut c is then turned down to act as a check-nut for holding it firmly in position. This contact should be, as stated, slight, and should be regulated after the transmitter box or case is secured in position.

The operation of my invention is as follows: Supposing a given current from the battery to be flowing, the attractive force exerted upon D by E will cause a firm contact between p and d, which will be approximately the mean of pressure or of surface-contact. If now a heavy impulse thrusts forward the stud p against d, the result will be quite different from that observed when the suspended bar B is held in place merely by gravity or by a spring. Instead of being carried away by its momentum, thus breaking the circuit, the bar C is held in closer contact by the increased attractive force of core E, such increased attractive force being due to a stronger current operating upon it, and such stronger current is obtained by the increased contact between p and d by the thrust of p against d. For this reason more ample vibration can be given to the diaphragm without "breaking." The pressure, however, at the end of the excursion is considerably less than that quickly succeeding the initial thrust, the then greatly-increased attractive force of E having been to a great extent overcome by the momentum of C; but enough force still remains in E to secure, on the retreat of the diaphragm and stud p, actual contact. This contact, however, rapidly diminishes almost to the point of disruption at the extreme point of retreat, as will be understood by considering the mutual action of pressure between the electrodes and attractive force of core E, one acting upon the other and being in turn acted upon by the other. In practice I find that a proper relation (easily determined by experiment) between the battery, the coil F, and the space between E and D gives a combination by which very loud sounds are perfectly transmitted, and also one by which the faintest are also sent to line with equal facility, and this without further adjustment. To provide, however, for different conditions of the battery, I make the core E movable within the coil F, so that it may, at will and without opening the transmitter-box, be adjusted at a greater or less distance from D.

By my transmitting-telephone telephony through very long lines, heretofore impossible, is rendered practicable; and upon short lines a great advantage in distinctness and volume of tone is obtained, the vibration of the diaphragm in an ordinary receiving-telephone being so greatly amplified as to be distinctly heard at a distance of several feet. Even better results are obtained from receiving-telephones constructed with special reference to the duty required. The reason of this marked superiority is in the fact that a stronger induced current is derived from the greater range of variation in the primary current from the battery.

It should, perhaps, be clearly stated that I use a stronger battery than is used ordinarily or can in ordinary transmitters be used to advantage, for the following reasons: As the induced current sent to line has a strength proportioned to the degree of variation in the battery-current, it is clear that the induced current due to a battery of ten volts varied to nine volts would be no more powerful than one due to a battery of two volts varied to one volt. It is also clear that the induced current due to a battery of five volts varied to one volt would be much more powerful than one due to a battery of ten volts varied only to nine volts.

It will be observed that the electro-magnetic attraction governing the pressure between the electrodes is not exerted directly upon the diaphragm, but upon a freely-suspended bar carrying one of the electrodes; also that the attraction is exerted upon the longer arm of a lever of the second kind, the pressure thereby being multiplied. By this arrangement a helix opposing less resistance to the battery-current can be used than would be the case were the pressure applied direct, as less attractive force is required to produce the same pressure.

The use of permanent magnets acting by attraction or repulsion to control to a certain extent the movements of the electrodes is not new, and is objectionable for the reason that when not provided with an inducing-coil said magnets exert a constant force like that due to a spring or to gravity; and even when furnished with an inducing-coil they do not act as completely and powerfully as a soft-iron core, because, as is well known, a steel bar, whether used as a core or an armature, cannot be as powerfully acted upon by a coil, and also because the difference in magnetic tension under wide variations in the battery-current cannot be as great as with a soft-iron core whose power has a range from maximum to zero.

Another important difference lies in the fact that the electro-magnetic core is not in contact with any of the moving parts of the transmitter, and when once brought to a proper adjustment remains stationary. As with this arrangement I do not utilize any motion of the core to act inductively (electrically) upon a secondary wire, my primary helix is wound next to the core, thereby realizing its maximum effect; and by placing my electrode upon a disconnected part I am able to make of my electro-magnet the primary of an efficient induction-coil.

Having thus fully described my invention, I claim as new the following:

1. The combination of the suspended bar C, carrying one of the electrodes attached to the

adjusting device *c c' c''*, with the vibrating diaphragm carrying the other electrode, and the electro-magnetic controlling device, all operating substantially as described, and for the purpose specified.

2. The vibrating diaphragm carrying one of the electrodes, in combination with the suspended bar C, and the bolt *c''*, carrying the other electrode and the check-nut *c*, as and for the purpose specified.

3. The electro-magnetic controlling device operating in the manner described, in combination with the suspended bar C, the bolt *c''*, carrying one electrode and the check-nut *c*, and the vibrating diaphragm carrying the other electrode, as and for the purpose specified.

4. The bolt *c''*, carrying the carbon button *d* and the check-nut *c*, in combination with the suspended bar C, as and for the purpose described.

In testimony whereof I affix my signature, in presence of two witnesses, this 4th day of December, 1882.

MYRON L. BAXTER.

Witnesses:
JAMES T. RICHARDSON,
D. G. DIXON.